dar
Making Dreams a Reality

VELBUS®
makes life easy

openremote
Open Source for Internet of Things

openHAB
empowering the smart home

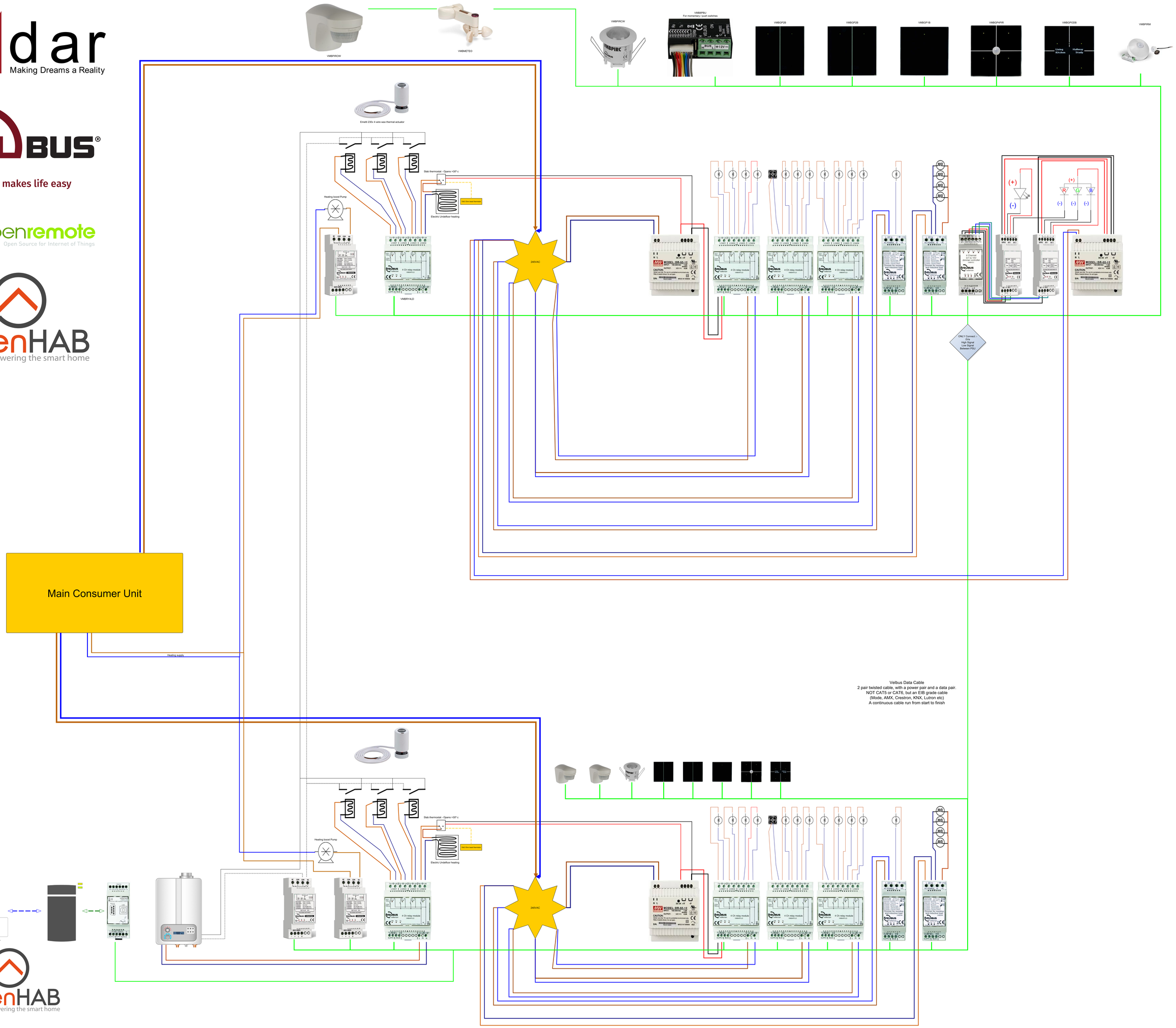

openHAB
empowering the smart home