Document Title :- Basic One-wire Wiring Plan S-Plan Plumbing, with Microswitches within actuators (4-Wire WTA)
Last edited :- January 2024
Ideal Print Size :- ISO A2

velbus® makes life easy

openremote Control4

openHAB empowering the smart home

Home Assistant

Trigrr

dar Making Dreams a Realit

https://installers.velbus.co.uk
or
https://www.velbus.co.uk
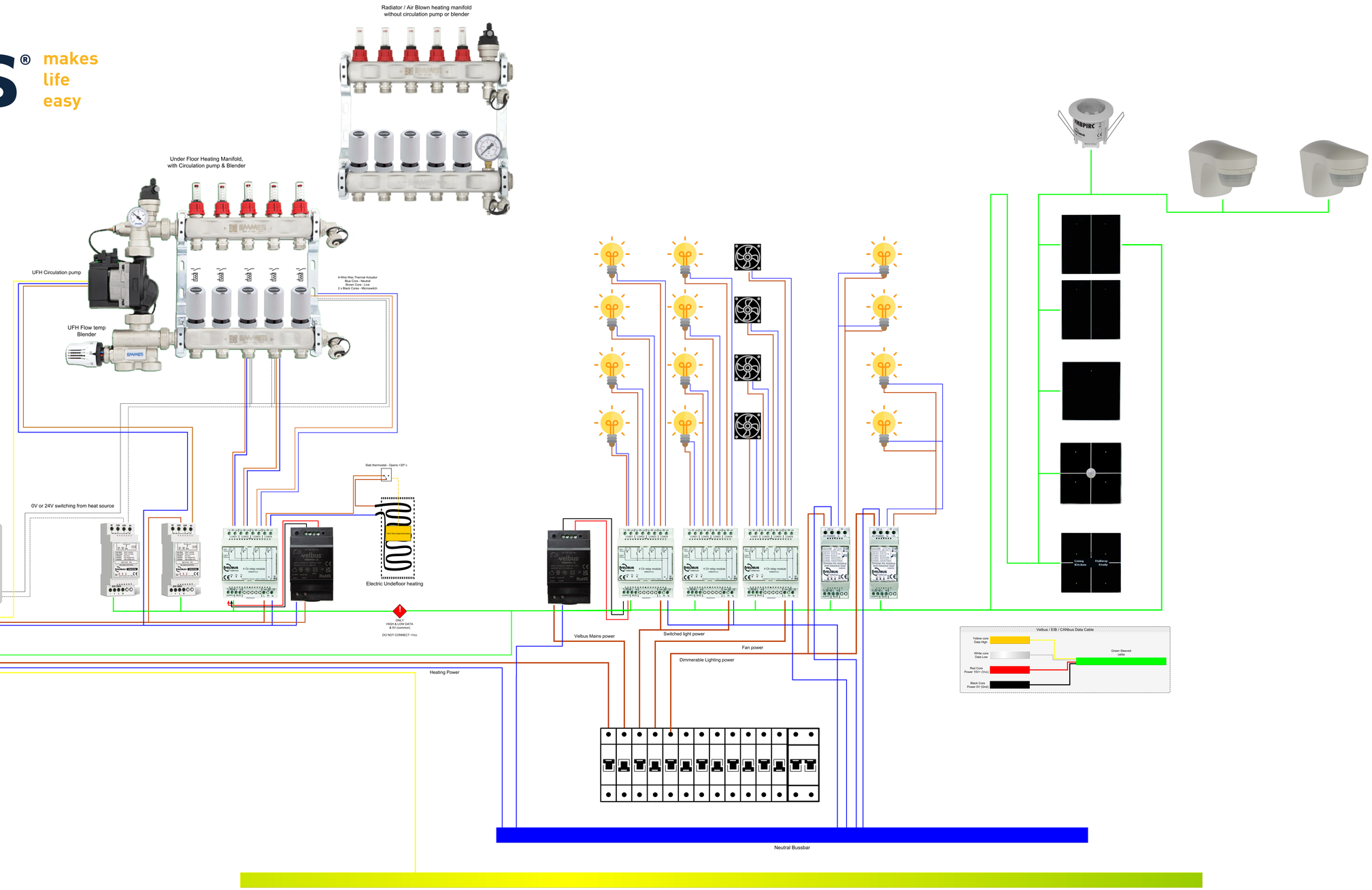
velbus.co.uk/downloads/