velbus® makes life easy

Velbus Logo

openremote Open Source for Internet of Things

OpenRemote

Control4

Control4

openHAB empowering the smart home

openHAB

Home Assistant

HomeAssistance

Bezonic

Bezonic

MDAR Making Dreams a Realit
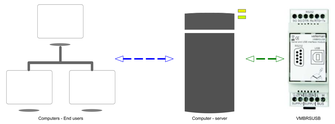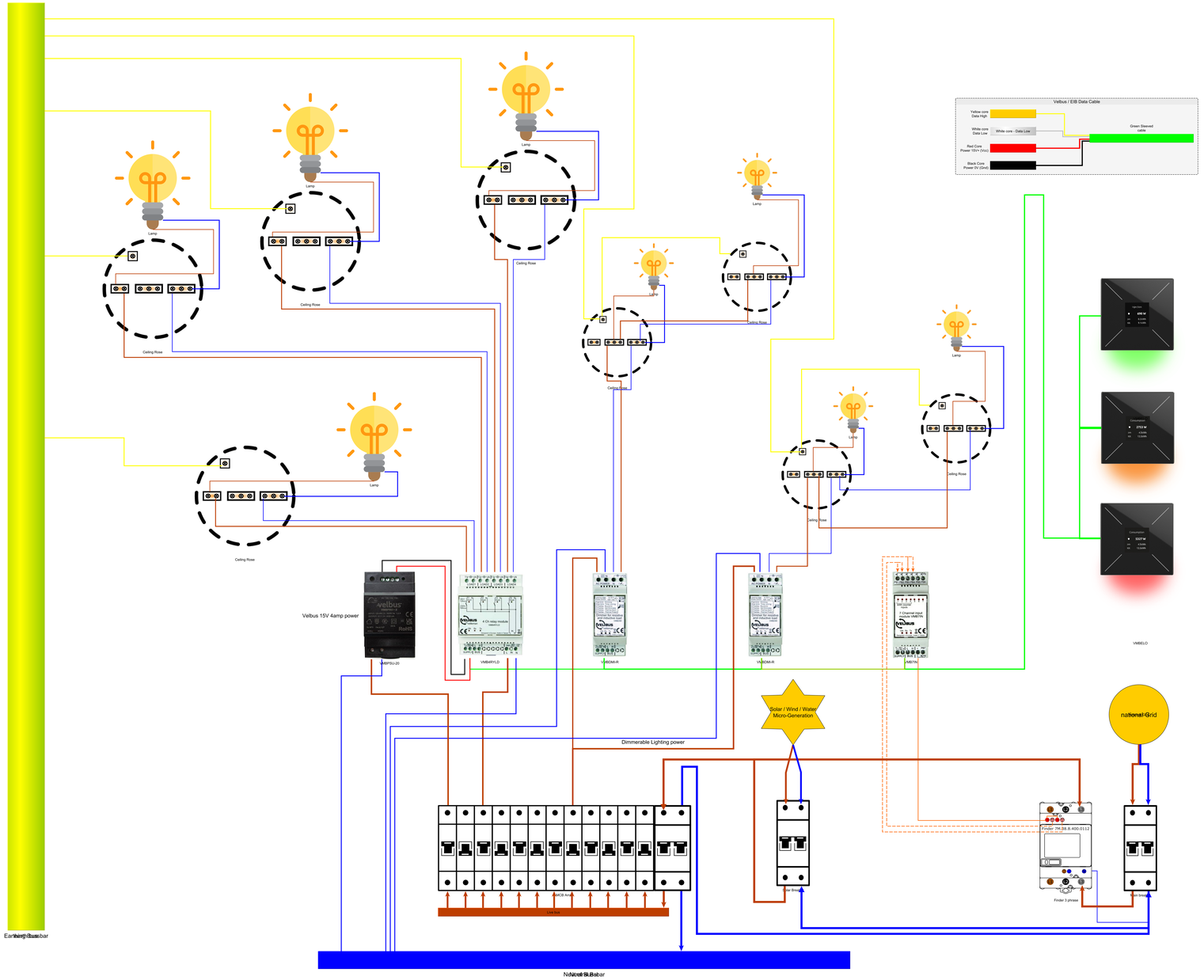
MDAR Ltd