velbus® makes life easy

openremote

Control4

openHAB
empowering the smart home

Home Assistant

Bezonia
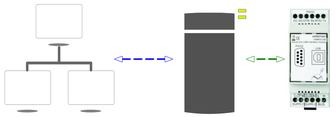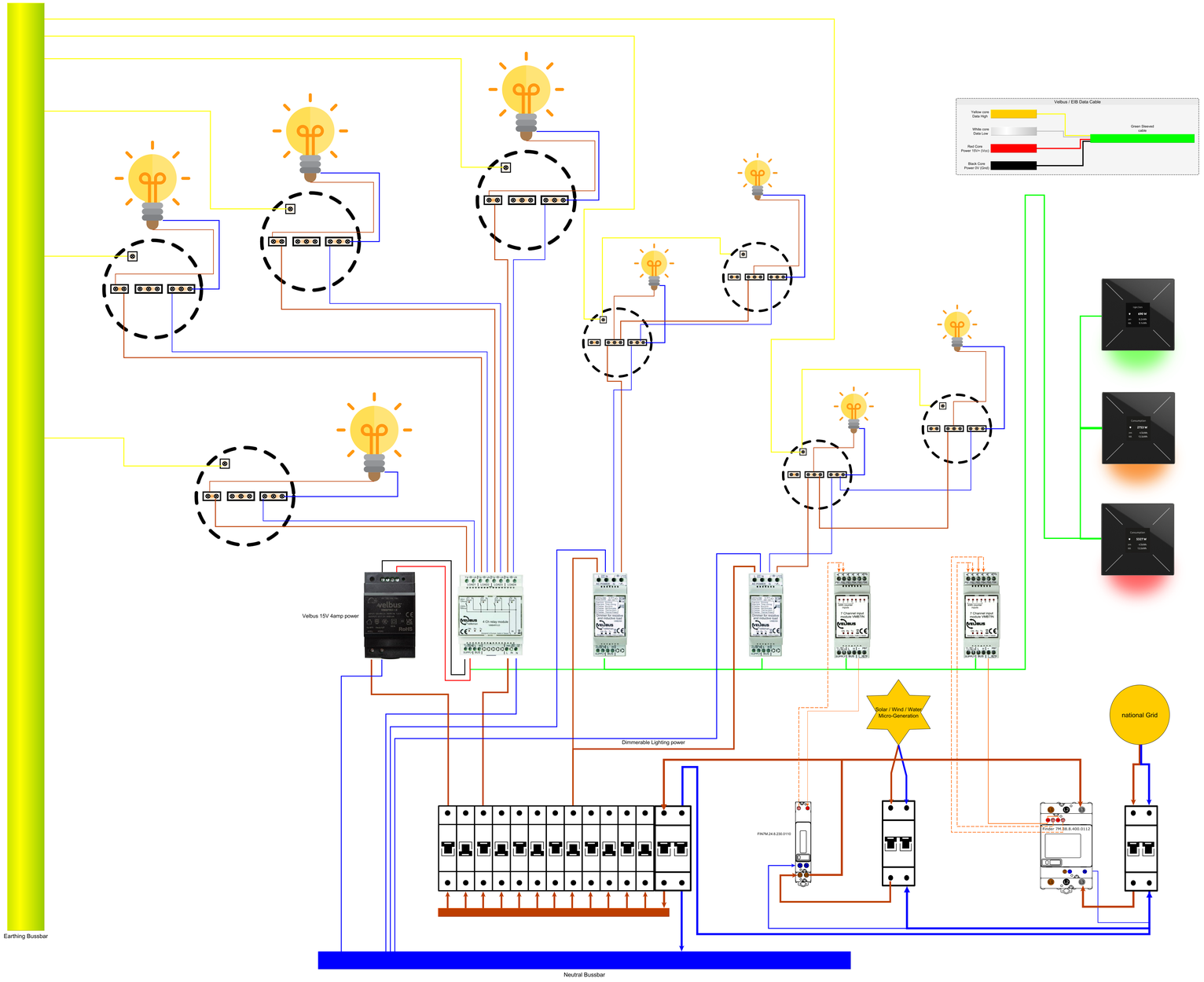
dar
Making Dreams a Realit