TL Marker

TR Marker

Bi-Directional energy monitor, with Three phase service connection

velbus® makes life easy

Velbus Logo

openremote Open Source for Internet of Things

OpenRemote

Control4

openHAB empowering the smart home

openHAB

Home Assistant

HomeAssistance

Bezonic

Bizonia

mdar Making Dreams a Realit

MDAR Ltd

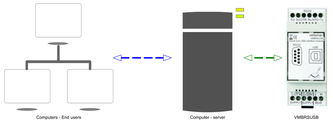

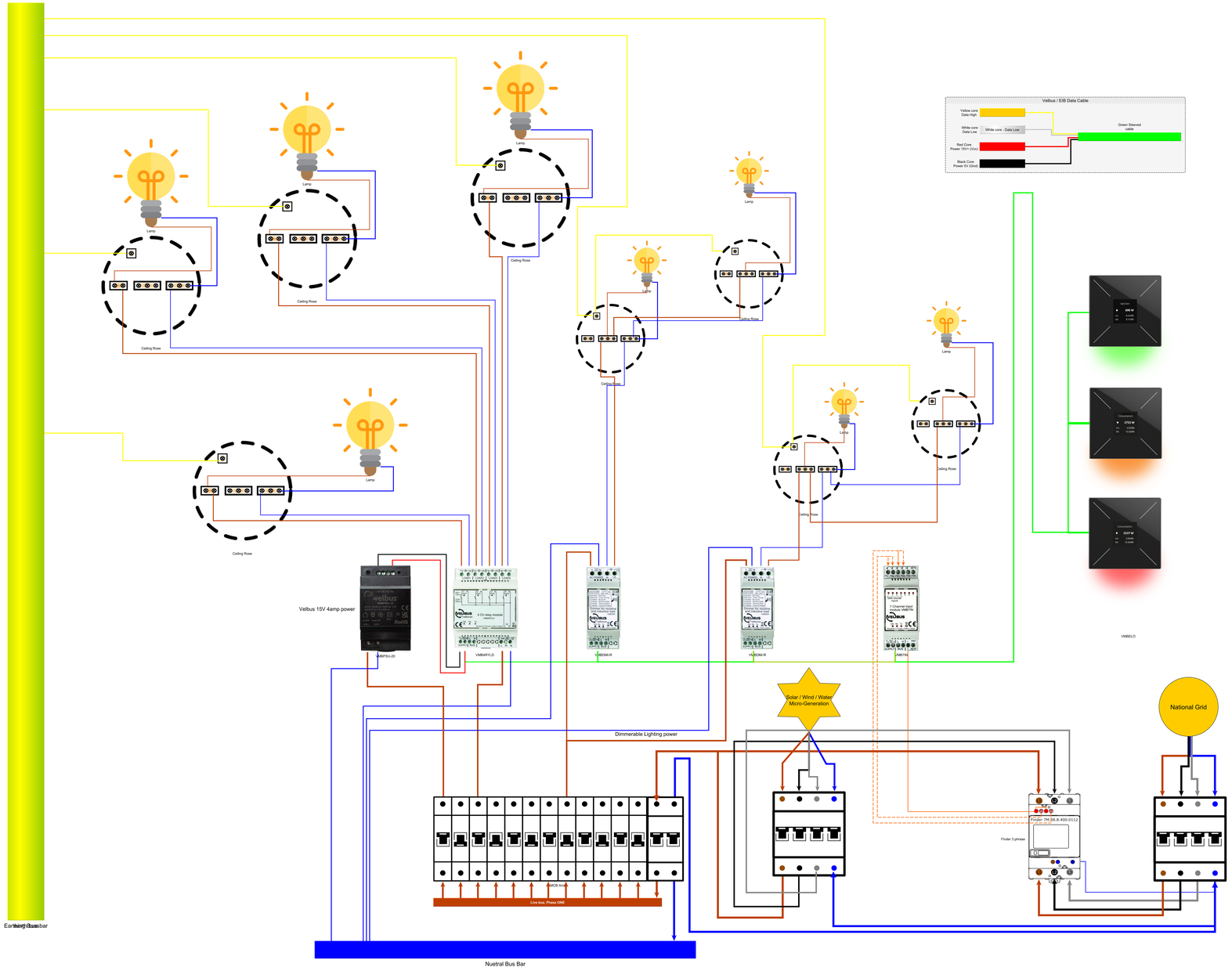

BL Marker

BR Marker