Document Title :- Basic Wiring - Ceiling roses
Last edited :- January 2024
Ideal Print Size :- ISO A2

velbus® makes life easy
www.velbus.eu

Control4

openremote
Open Source for Internet of Things

openHAB
empowering the smart home

Home Assistant

Trigrr

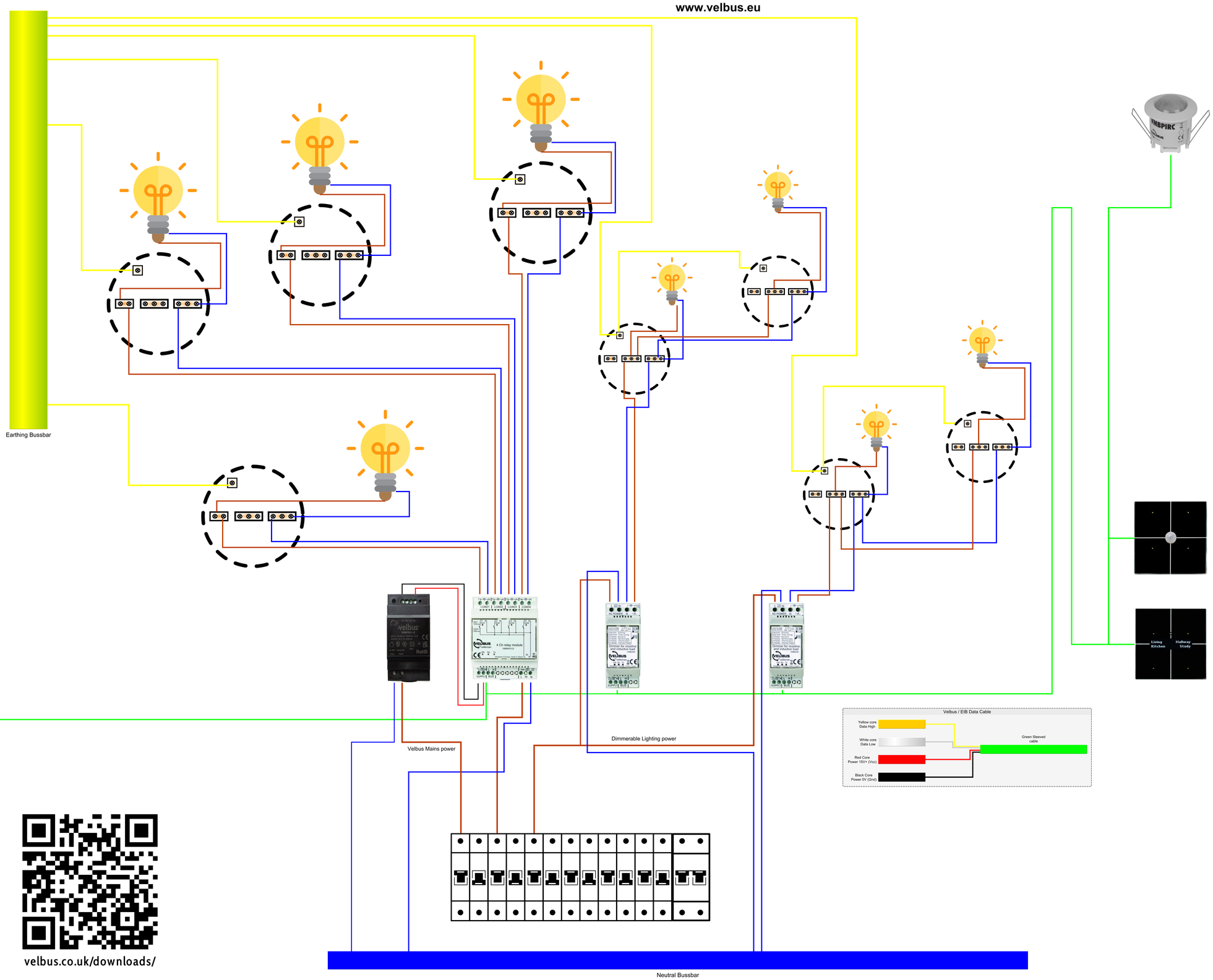

dar
Making Dreams a Realit
https://installers.velbus.co.uk

velbus.co.uk/downloads/