Document Title :- Basic Wiring for Energy monitoring & Solar generation using CT Coils
Last edited :- January 2024
Ideal Print Size :- ISO A2

velbus® makes life easy

openremote Control4

openHAB empowering the smart home

Home Assistant

Trigrr

dar
Making Dreams a Realit

https://installers.velbus.co.uk
or
https://www.velbus.co.uk

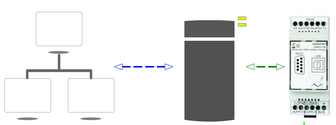
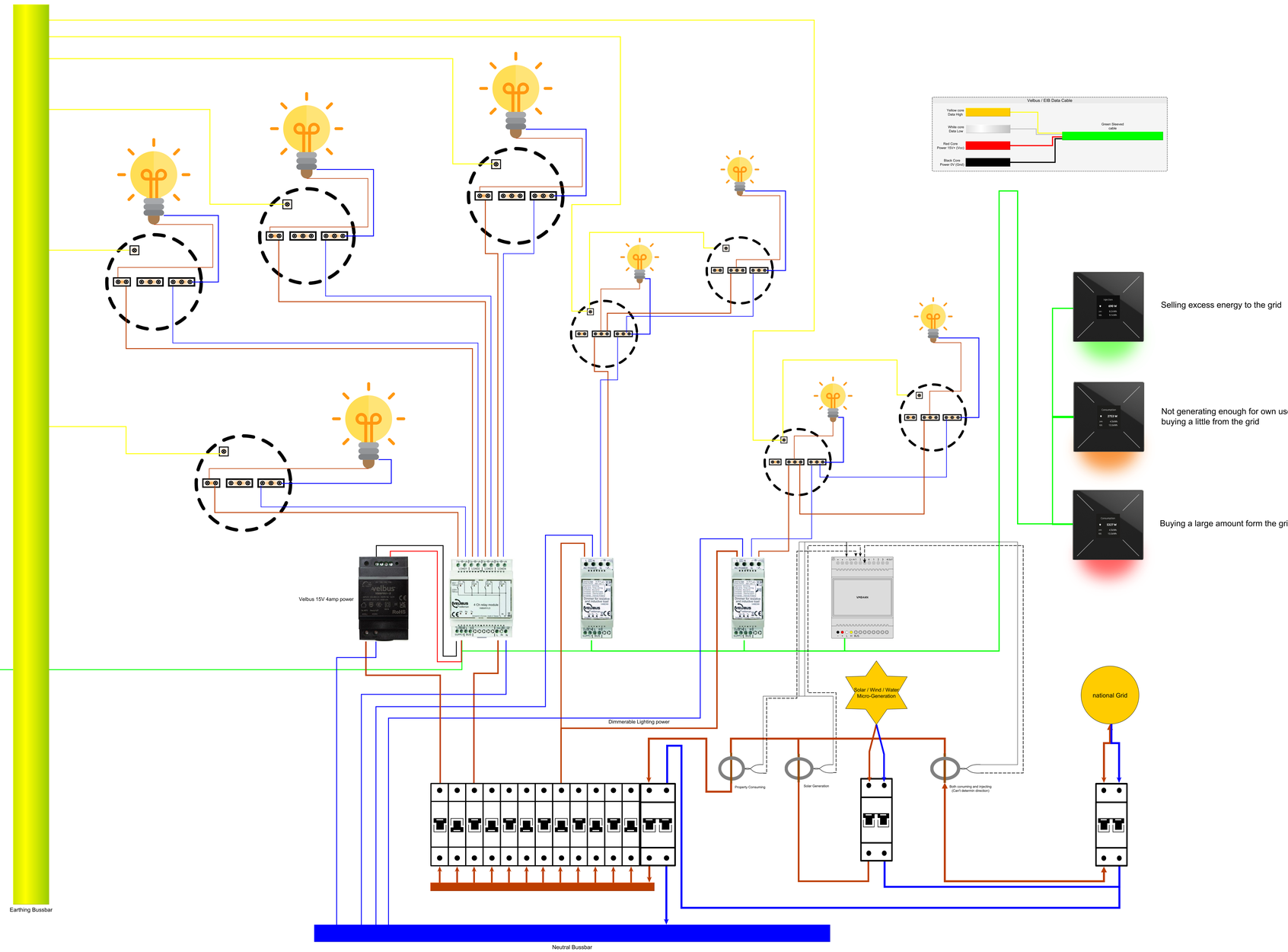
velbus.co.uk/downloads/